BASIC DATA:–
CAPACITY:–2600 T.P.H
DUTY:–CONTINUOUS
MATERIAL:–COAL
LUMP SIZE:–(–)100MM,(–)20MM
BELT SPEED:– 3.14 M/SEC (MAX)

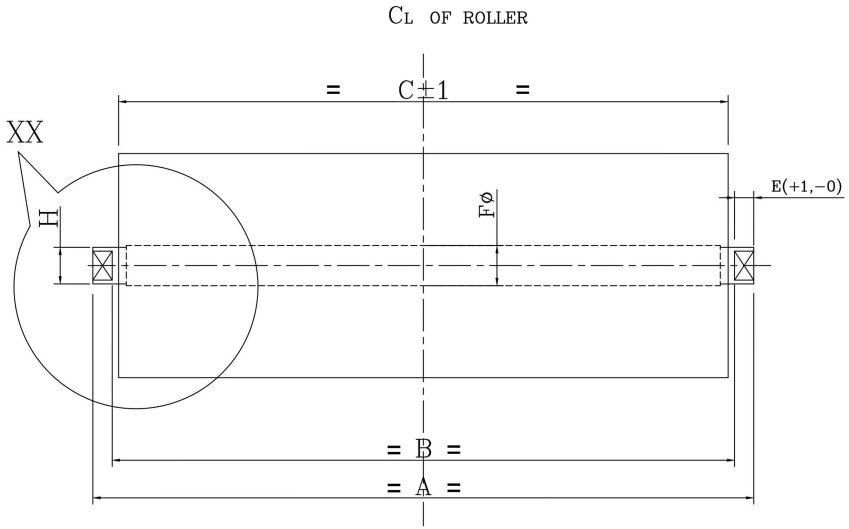

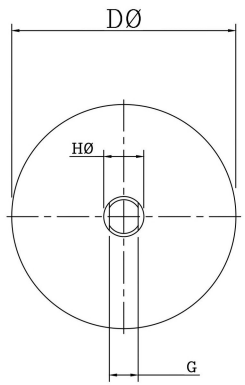

SPINDLE TYPE–A

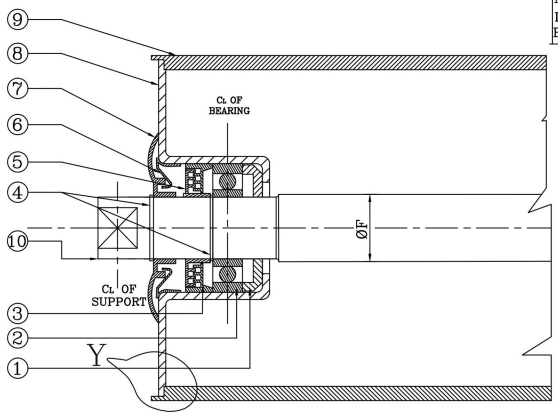

DET–XX
SPINDLE TYPE–A

SI NO	B/W	A	B	C	DØ	E	FØ	G	HØ	SHAFT DIA AT BEARING	BRG.NO.	BRG.MAKE	WT.OF ROTATING PARTS APPROX (KG)	WT.OF SINGLE ROLL APPROX (KG)
1	1800	702	678	670	152.4	12	30.15	22	30	30	6206–Z	SKF/FAG/ NBC	14	18

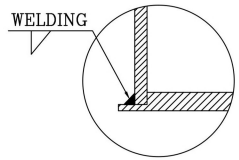

DETAIL–Y

NOTES:–

Sketch No.2

PROJECT:- IB THERMAL POWER STATION
2 X 660 MW UNITS 3 & 4

DESCRIPTION : **GA of Non Magnetic Idler**

SCALE	NTS	DRW BY:ABUZER AMMARI, DT:–11/09/2015
DRAWING NO: AMPS/BGR/15–16/CIR–02		REV:C