PURCHASE ORDER NO : NA

CAST BASALT LINED PIPE DIMENSIONS – 350 NB PIPE								
MATERIAL CODE	DRG.NO	TAG.NO	SN.	CB ID (øD1)	MS OD (øD2)	RADIUS (R)	ANGLE (Q°)	QTY. IN NO
–	A	CBB 350/90D	001	356	436	1050	90°	06

FIXED FLANGES 'A' DIMENSIONS							
NB	ID	OD	PCD	N/H<O/F CTR.>	øH	THK.	QTY
350	440	590	530	16	26	25	02/NO
MATCHING FLANGES 'M' DIMENSIONS							
NB	ID	OD	PCD	N/H<O/F CTR.>	øH	THK.	QTY
350	370	590	530	16	26	25	02/NO

FASTENERS DETAIL(32 SETS/BEND): HEXAGONAL TYP.		
1SET=1BOLT+1NUT:GR.4.6&4 AS PER IS1364NORMAL/BLACK		
DIA	LENGTH	THREADED TYPE
M24	100	HALF/FULL THREADED

RETAINER 'R' DIMENSIONS				
NB	ID	OD	THK	QTY
350	356	428	6	02/NO

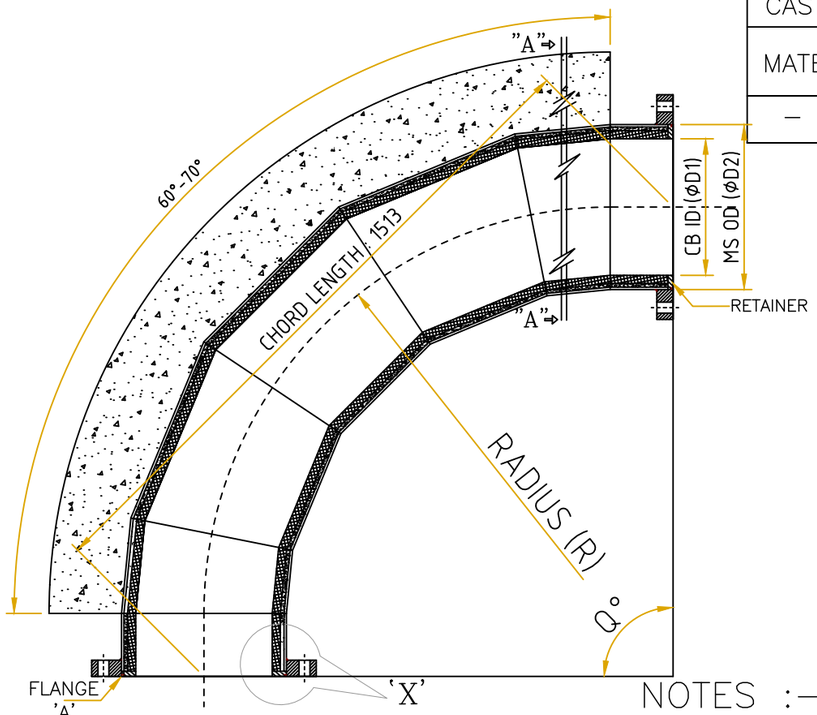

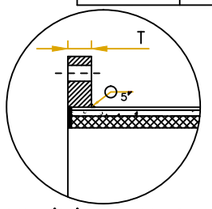

DETAIL 'X' : FIXED FLANGE WELDING DETAIL

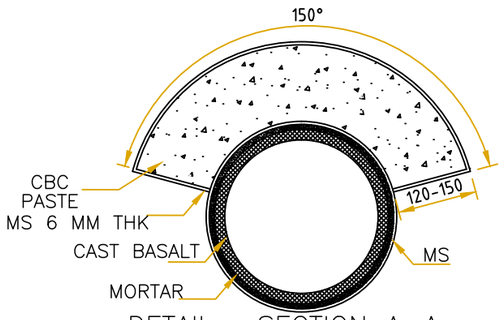

DETAIL : SECTION A–A

NOTES :–

1) ALL DIMENSIONS ARE IN MM. UNLESS NOTED
2) MS CASING PLATE MATERIAL 6 MM THK AS PER IS:2062 /EQUI. MATERIAL.MS CASING SHALL BE FABRICATED AS PER IS 2062 TOL. AS PER IS 3589. MAKE : REPUTED MANUFACTURER.
3) MITTER SHOWN IN DRAWING IS FOR REFERENCE PURPOSE ONLY. NO OF MITERS SHALL BE AS PER GCE DESIGN.
4) FLANGE FITTING TYPE : AS PER DRAWING.
5) PAINTING : TWO COATS OF RED OXIDE PRIMER
6) MOC OF FLANGE: IS 2062
7) HYDRO TESTING PRESSURE : BEFORE LINING BY MANUFACTURER @ 20 KG/SQ.CM
8) SUITABLE LIFTING LUGS SHALL BE PROVIDED FOR LIFTING

GENERAL TOLERANCES

DIMN	FABRICATION	MACHINING	DIMN	FABRICATION	MACHINING
0-10	±0.5	±0.1	501-1000	±3.0	±0.8
11-50	±0.5	±0.2	1001-3000	±4.0	±1.2
51-100	±1.5	±0.3	ABOVE 3000	±6.0	±2.0
101-500	±2.0	±0.5			

PROPERTIES OF CAST BASALT		
SR.NO	PROPERTIES	VALUE
1	DENSITY	2.8 TO 3.1 gm/Cu.cm
2	COMPRESSION STRENGTH	4500 KG/Sq.cm(min)
3	HARDNESS	8 MOH'S (min)
4	BENDING STRENGTH	300 Kg/Sq.cm (min)

REVISION CHART		
SN.	DATED	REVISION MARK
01		
02		

LEGENDS :

1) CAST BASALT : 20 MM THK
2) MS CASING : 6 MM THK
3) MORTAR : AS PER GCE STAND

GENERAL TOLERANCE FOR LINED EQUIPMENTS	
	CAST BASALT
ID	±3
LINING THK.	±2
RADIUS	±5
ANGLES	±0.5
LENGTH	±5 MIN
CASING OD	±3 MIN

* ALL DIMENSIONS ARE IN MM.

CLIENT: OPGCL

PROJECT: ASH SLURRY LNE

TITLE: CAST BASALT LINED BENDS & FITTINGS 350 NB

DRN.	CHECKED_BY	APPROVED _BY	DATE	SCALE	DRG NO.	REV.